Large ELPRO

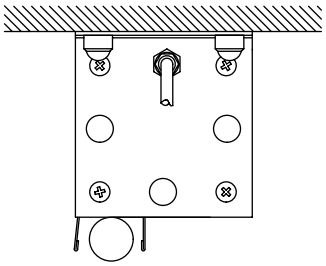

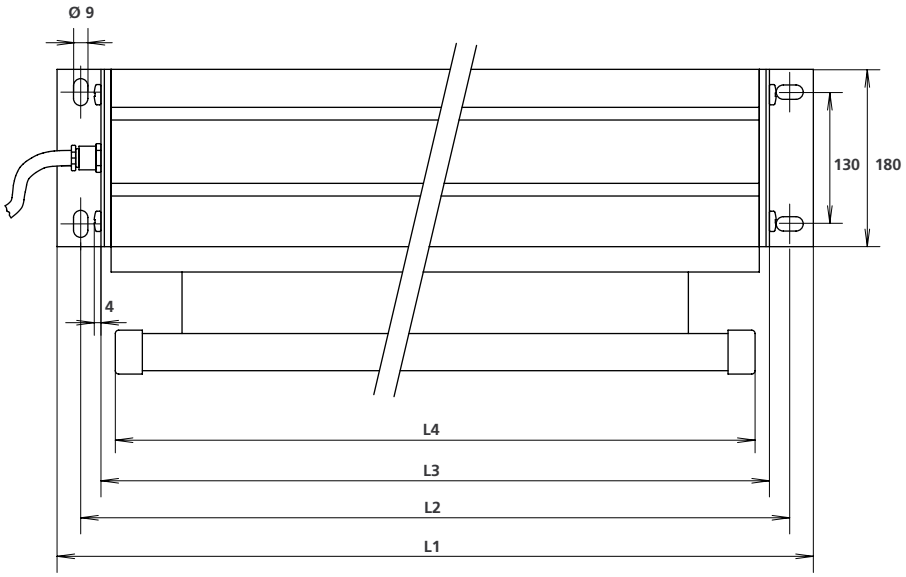

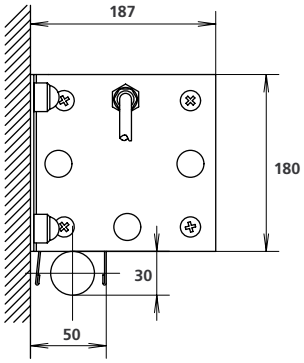

Screen size	Dimensions (in mm)			
	L1	L2	L3	L4
350x350cm	3674	3644	3604	3580
300x400cm	4174	4144	4104	4080
350x400cm	4174	4144	4104	4080
400x400cm	4174	4144	4104	4080
350x450cm	4674	4644	4604	4580
365x500cm	5174	5144	5104	5080

Mounting Equipment

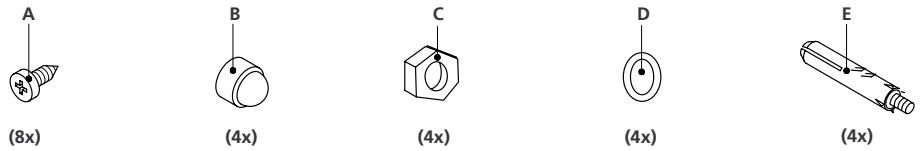

Mounting

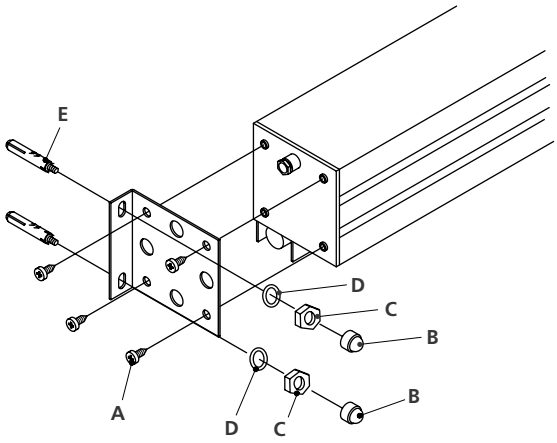

Specifications are subject to change without prior notice. Version 11/2002